PTT Exploration and Production Public Company Limited

PTTEP Engineering General Specification

PEGS

Piping or Pressure Vessel Components in Duplex and Superduplex Stainless Steel

Document No: PEGS-12059-PIP-020

Revision No: 0-0

Revision Date: March 2016

PTT Exploration and Production Public Company Limited

PEGS DOCUMENT REGISTER	
Document Title:	Piping or Pressure Vessel Components in Duplex and Superduplex Stainless Steel
Document Reference No:	PEGS-12059-PIP-020
Prepared By (Author):	Chatri Kriengyakul
Division/Department/Asset/Company:	12059

Document Custodian
(To be signed on acceptance of Rev.0-0)

Position	Name	Dept. Code	Signature	Date
Owner:	Chatri Kriengyakul	12059		05-04-16
Manager:	Achawah Thongkhao	12059		8 Apr 16

Document Approvals
(To be signed before release of Rev.0-0)

Approver		Signature	Date
Name:	Manasvee Ruangdet **DAR Initiator** Engineering and Technical Solutions Department (12059)		8/04/16
Name:	- **Division SVP** (If different from above) -		
Name:	Pich Piyaratn **VP** Engineering Management System Department (12060)		12/4/16
Name:	Kanit Sangwongwanich **Group EVP** Engineering and Development Group (10008)		12/4/16

This page shall be retained in the master archived copy

THIS DOCUMENT WILL BE REVIEWED 3 YEARS FROM DATE OF APPROVAL OR REVISED EARLIER IF NECESSARY

Revision History		
Rev	Description of Revision	Date
0-0	New Document	16-Mar-16

TABLE OF CONTENTS

1.0 Purpose 2

2.0 Scope 2

3.0 Definitions 3

3.1 Language 3
3.2 Terminology 3
3.3 Common Acronyms 3

4.0 References 4

4.1 PTTEP Internal References 5
4.2 International Standards 5
4.3 Industry Codes and Standards 5

5.0 Requirements for Piping or Pressure Vessel Components in Duplex and Superduplex Stainless Steel 7

5.1 General 7
5.2 General Requirements 7
5.3 Testing 8
5.4 Fabrication 12
5.5 Non Destructive Examination of Components 13
5.6 Repair by Welding 16
5.7 Hydrostatic Tests 16
5.8 Finishing 17
5.9 Pickling and Passivation 17
5.10 Marking 17
5.11 Color Coding 18
5.12 Packing and Handling 18
5.13 Certificate 18
5.14 Final Documentation 18

6.0 Appendices 20

Appendix 1. Weld Bead Alignment and Inter - Penetration 20
Appendix 2. Location of Charpy V-Notch Specimens 21
Appendix 3. Vickers Hardness and Ferrite Content Survey in Weld 22
Appendix 4. Ultrasonic Testing – Reference Sensitivity Block 23

UNCONTROLLED when printed, visit PTTEP Intranet for latest version

1.0 PURPOSE

The purpose of this General Specification is to provide specific requirements for piping or pressure vessel components in Duplex and Superduplex Stainless Steel.

2.0 SCOPE

This specification covers specific requirements applicable to components used either on equipment such as pressure vessels or heat exchangers, or as piping materials including pipes, fittings, valves and etc, which are made of duplex 22-05 or superduplex 25-07 stainless steel.

This specification is applicable to the manufacturing process of individual components, but does not cover assembly of these components to each other by welding (welding is only considered if it is a part of the fabrication of individual components such as welded pipes or welded fittings).

UNCONTROLLED when printed, visit PTTEP Intranet for latest version

3.0 DEFINITIONS

A number of different terms are commonly used to describe the work stages, processes, and approvals which take place during the early stages of a development. This can often be a source of confusion so the following section is intended to show the PTTEP preferred terminology as used in this document.

3.1 LANGUAGE

In this document, the words should and shall have the following meanings:

Should	Indicates a preferred course of action. Should is a non-mandatory word and is not forbidden, but use in the body of the text should be the exception. Where none mandatory terms are used, each paragraph within these clauses shall also have an associated commentary paragraph that provides the rationale for why the stated choices and modifications are appropriate and circumstance under which the stated choices and modifications might be different.
Shall	Indicates a course of action with a mandatory status. The term “shall” shall be used if a requirement is considered to be necessary to claim compliance with a PEGS document.

3.2 TERMINOLOGY

Terminology	Description
Approval	The authorization in writing given by the COMPANY to the Contractor on a procedure or to proceed with the performance of a specific part of the work without releasing in any way the Contractor from any of his obligations to conform with the technical specifications, requisitions, etc. The words “Approve”, “Approved” and “Approval” shall be construed accordingly.
COMPANY	PTT Exploration and Production Public Company Limited and its subsidiaries
Contract	"Contract" means this signed agreement together with the Exhibits and Annexes which are made part thereof, and any future amendments thereto.
Contractor	Per contract: Contractor – ‘The contractor who is a party to this Contract and where the context so requires, any and all Subcontractor utilised by Contractor for the performance of the work’.
Manufacturer	The company or its sub-contractor(s) selected by the COMPANY or the Supplier (as applicable) as the Manufacturer(s) of the said materials.
PPS	Designates Project Particular Specification detailing the additional tests and requirements or the possible modifications to the present specification, based on the particular design conditions or the local legislation of the project.
Vendor or Supplier	The company or its agents designated on the Purchase Order or Contract as being the selected Supplier of the said materials.

3.3 COMMON ACRONYMS

Set out below in alphabetical order are common acronyms as found within this document:

MPS	Manufacturing Procedure Specification
NDE	Non Destructive Examination
PREN	Pitting Resistance Equivalent Number

4.0 REFERENCES

The reference documents listed below, including Industry Codes and Standards and COMPANY specifications, form an integral part of this Engineering General Specification. Unless otherwise stipulated, the applicable version of these documents, including relevant appendices and supplements, is the latest revision published on the effective date of a contract.

The overall order of precedence of the applicable documents shall be:

1. Applicable Laws, Rules and Regulations of the country in which the system/equipment will be operated (if any);
2. Purchase Order/ Service Order/ Contract Documents (Only applicable for direct purchase by COMPANY);
3. Project Particular Specification (PPS), and relevant data sheet(s) if any;
4. COMPANY General Specification;
5. Codes and Standards in reference.

Any conflict between any of the Contract Documents, or between this specification and any other Contract Document, shall be reported to COMPANY for decision. In such a case, and unless otherwise agreed or decided by COMPANY, it is understood that the more stringent requirement shall apply.

Exceptions to, or deviations from this specification are not permitted unless previously accepted in writing by COMPANY. For this purpose, requests for substitutions or changes of any kind shall be complete with all pertinent information required for COMPANY assessment. COMPANY's approval, nevertheless, will not, in any way, relieve the responsibility of the Contractor to meet the requirements of the industry Codes and Standards referred to and amended herein, in the event of conflict.

UNCONTROLLED when printed, visit PTTEP Intranet for latest version

4.1 PTTEP INTERNAL REFERENCES

Internal documents applicable to this document are indicated in the table below.

Document Number	Document Title
PEGS-12060-ADM-002	Minimum Requirements for Vendor's Documentation
PEGS-12060-ADM-005	Specification for Packing
PEGS-12060-ADM-006	Quality Requirements for Contractor/ Vendor
PEGS-0842-COR-031 (*)	Treatment of Hydrostatic Test Water
PEGS-0842-COR-032 (*)	Materials for Sour Service
PEGS-12060-INT-001	Inspection and Testing Requirements
PEGS-12060-MMA-001	Material Traceability
PEGS-12059-PIP-005	Pipes, Flanges, Fittings and Bolting for Piping
PEGS-0710-PIP-010 (*)	Welding of Duplex and Superduplex Stainless Steel
PEGS-0710-PIP-013 (*)	Internal Cleaning of Equipment and Piping Networks

(*) The second place (e.g. 0710) and third place (e.g. PIP) in document number refers to Custodian Department code and document discipline / category respectively. As a result of re-organization, department code numbers have been changed and there is possibility of revising the document category (e.g. PIP) as well. Considering this, these PEGS's will be revised in due course. Hence, CONTRACTOR / user of this PEGS shall refer to the latest PEGS available at the time of CONTRACT award.

4.2 INTERNATIONAL STANDARDS

International standards applicable to this document are indicated in the table below i.e. ISO, IEC or ITU.

Document Number	Document Title
ISO 148	Metallic materials - Charpy pendulum impact test
ISO 6892	Metallic Materials - Tensile Testing
ISO 9712	Non-destructive Testing - Qualification and Certification of NDT Personnel
ISO 10474	Steel and Steel Product – Inspection Documents
ISO 11699	Non Destructive Testing - Industrial Radiographic Films

4.3 INDUSTRY CODES AND STANDARDS

Industry codes, standards and regional legislation applicable to this document are indicated in the table below.

Document Number	Document Title

Document Number	Document Title
EEMUA 218	Quality Requirements for the Manufacture and Supply of Duplex Stainless Steels
EN 10204	Metallic Products - Types of Inspection Documents
ASME B31.3	Process Piping
ASME Section VIII	Rules for Construction of Pressure Vessels
ASTM A182M	Standard Specification for Forged or Rolled Alloy and Stainless Steel Pipe Flanges, Forged Fittings, and Valves and Parts for High-Temperature Service
ASTM A240M	Standard Specification for Heat-Resisting Chromium and Chromium-Nickel Stainless Steel Plate, Sheet, and Strip for Pressure Vessels
ASTM A370M	Mechanical Testing of Steel Products
ASTM A388M	Standard Practice for Ultrasonic Examination of Heavy Steel Forgings
ASTM A745M	Standard Practice for Ultrasonic Examination of Austenitic Steel Forgings
ASTM A790M	Standard Specification for Seamless and Welded Ferritic/ Austenitic Stainless Steel Pipe
ASTM A815M	Standard Specification for Wrought Ferritic, Ferritic/Austenitic and Martensitic Stainless Steel Piping Fittings
ASTM A923	Standard Test Methods for Detecting Detrimental Intermetallic Phase in Duplex Austenitic/Ferritic Stainless Steels
ASTM A928M	Standard Specification for Ferritic/Austenitic Stainless Steel Pipe Electric Fusion Welded with Addition of Filler Metal
ASTM A960M	Standard specification for Common Requirements for Wrought Steel Piping Fittings
ASTM A988	Standard specification for Hot Isostatically-Pressed Stainless Steel Flanges, Fittings, Valves, and Parts for High Temperature Service
ASTM A995M	Standard Specification for Castings, Austenitic-Ferritic (Duplex) Stainless Steel, for Pressure-Containing Parts
ASTM A999M	Standard Specification for General Requirements for Alloy and Stainless Steel Pipe
ASTM E165	Standard Test Method for Liquid Penetrant Examination
ASTM E213	Standard Practice for Ultrasonic Testing of Metal Pipe and Tubing
ASTM E309	Standard Practice for Eddy-Current Examination of Steel Tubular Products Using Magnetic Saturation
ASTM E384	Standard Test Method for Knoop and Vickers Hardness of Materials
ASTM E562	Standard Test Method for Determining Volume Fraction by Systematic Manual Point Count
MSS-SP-25	Standard Marking System for Valves, Fittings, Flanges and Unions
SNT-TC-1A	American Society for Non-destructive Testing Recommended Practice

5.0 REQUIREMENTS FOR PIPING OR PRESSURE VESSEL COMPONENTS IN DUPLEX AND SUPERDUPLEX STAINLESS STEEL

5.1 GENERAL

5.1.1 QUALITY ASSURANCE/QUALITY CONTROL

Prior to commencement of manufacture, the Vendor shall prepare and submit to COMPANY a written Quality Manual, Quality Procedures, Inspection and Test Plan, as per the requirements in COMPANY General Specification PEGS-12060-ADM-006, for review and approval in due course.

5.2 GENERAL REQUIREMENTS

All The components made from duplex and super duplex stainless steel shall meet the requirements of COMPANY General Specification PEGS-12059-PIP-005.

All duplex and superduplex stainless steels shall be subject to secondary refining, details of which shall be stated at the bid stage.

The steel making process shall include alloy refining by Argon Oxygen Decarburization (AOD) or Vacuum Oxygen Decarburization (VOD) process.

All components shall be delivered in solution annealed water quenched condition. Solution annealing heat treatment shall take place after completion of **all** fabrication steps (forming, welding including repair, etc.) but before the final machining of the components (if applicable).

A furnace loading sketch and Manufacturing Procedure Specification shall be submitted to COMPANY. All duplex and superduplex stainless steel bids shall state the nominated manufacturer of the raw material and of the final components.

All components shall be delivered in conformance with the requirements of the referenced standard and the requirements of this specification.

Forged components shall be forged to shape.

All fabrication and control operations shall be defined in a Manufacturing Procedure Specification (MPS). MPS shall include the following information as a minimum:

- Steel making, casting and refining methods
- Chemical composition
- Manufacturing process with forming method, the extruded method is not permitted
- Heat treatment conditions (solution annealing)
- Destructive and non-destructive testing, inspection and test plan
- Pickling and passivation
- Marking

UNCONTROLLED when printed, visit PTTEP Intranet for latest version

- Transportation protection
- Welding and welding repair procedure (if applicable, e.g. for long seam pipe or fitting).

All components shall be delivered free of scale.

Finished products shall be white pickled.

All tests, such as mechanical, metallographic, corrosion, etc., shall be done in the final delivery conditions.

5.3 TESTING

Testing requirements shall be in accordance with the referenced product specifications, unless otherwise specified/ modified elsewhere in this specification.

Furthermore additional hardness test and ferrite content measurements shall be made on each component as detailed here under.

5.3.1 TEST ORIENTATION AND LOCATION

Test orientation and location shall be:

- For thickness (T) up to 50 mm, the test specimens shall be taken at mid thickness and its mid length shall be at least at 50 mm from any second surface
- For thickness (T) above 50 mm, the test specimen shall be taken at least at 1/2T from the nearest surface and at least T or 100 mm, whichever the less, from the second surface.

Sketches shall be established showing type, size and location of test samples and submitted to COMPANY for approval.

5.3.2 CHEMICAL COMPOSITION

Chemical composition shall be in accordance with the requirements stated in the referenced product specifications with the following additional requirements stated here below.

UNS S31803

(1) PREN: % Cr + 3.3 x % Mo + 16 x % N ≥ 34

(2) N - 0.14 to 0.20 %

UNS S32750 / S32760

(1) PREN: % Cr + 3.3 x % Mo + 16 x % N ≥ 40

Extent of chemical analysis shall be in accordance with product specification with additional requirements as below.

UNCONTROLLED when printed, visit PTTEP Intranet for latest version

Pipes

In addition to heat analysis, chemical analysis on product shall be carried out on two pipes of each heat, size and wall thickness. For welded pipes, chemical analysis shall include weld metal in addition to base metal.

Wrought fittings

Supplementary requirement S1 of ASTM A815M is applicable.

Plates

Product analysis shall be made on each heat of plate

5.3.3 MECHANICAL PROPERTIES

5.3.3.1 *TENSILE TEST*

The test shall be carried out in accordance with ISO 6892 or ASTM A370 standard.

Unless otherwise specified herein, the extent of testing shall be as per the reference product specifications.

For welded pipes, the transverse tensile specimen shall be taken across the welded joint. Specimens shall be taken from the end of the finished pipes; the transverse tensile test specimen shall be flattened cold before final machining to size. Transverse weld tensile test shall be carried out from each lot as referenced in product specification

For wrought fittings: the supplementary requirement S2 of ASTM A815M is applicable.

For forging components: tensile test shall be made for each heat and heat treatment batch. The testing shall be carried out on the component with heaviest wall thickness within the load. A test lot shall not exceed 2000 kg for forgings with as forged weight ≤ 50 kg, and 5000 kg for forgings with as forged weight > 50 kg.

5.3.3.2 *IMPACT TEST*

Charpy V-notch impact tests shall be carried out in accordance with ASTM A370.

Impact test shall be conducted for each heat, nominal wall thickness, and heat treatment load. For heat treatment in continuous furnace a heat treatment load is defined as all components heat treated continuously in the same furnace at the same temperature, of the same heat and nominal wall thickness.

One set of three specimens shall be taken from the component to be tested. Test specimen shall be located at mid thickness. In case of wall thickness (WT) greater than 25 mm, two sets (each set consisting of three specimens) shall be taken. One set of specimens shall be located 3mm from internal surface and another set of specimens as close as possible to outside surface.

UNCONTROLLED when printed, visit PTTEP Intranet for latest version

Impact specimens shall be located parallel to the longitudinal axis of the tensile test specimens. The axis of the notch shall be normal to the nearest heat-treated surface of the component.

Additionally for welded components impact tests shall be made in the weld. Location of test specimen (weld metal centre line, fusion line +2 mm and +5 mm) shall be as per Appendix 2.

Subsize specimens are only acceptable when full size specimens cannot be extracted. The largest possible subsize specimens shall be taken. Materials with a wall thickness equal or less than 6 mm may not be impact tested.

The acceptance criteria for 10 x 10 mm specimens shall be as per the following table:

Description	UNS S31803	UNS S32750
Test Temperature	minus 46ºC	minus 20ºC
Minimum average energy for one set (3 specimens)	70 J	55 J
Minimum individual energy for one specimen	50 J	40 J
Notes: Required energy for a subsize specimen is reduced in direct proportion to the reduced section area of the subsize specimen relative to that of the fullsize specimen.		

5.3.3.3 *HARDNESS TEST*

A Vickers hardness survey shall be carried out on each macrographic sample in accordance with ASTM E384 or equivalent using a 5 or 10 kg load. A minimum of eight indentations with 1mm spacing shall be made on each surface and at mid-thickness.

For welded components, indentations shall cover base material, heat affected zone and weld metal in accordance with Appendix 3.

Hardness test shall be conducted as per the same extent specified for impact test.

Furthermore hardness test shall be performed on 10% of the actual components in the final delivery conditions. For welded components hardness test shall also include weld metal and heat affected zone. Testing shall be conducted with portable hardness tester. A minimum of five hardness measurements is required for each component to be tested.

The acceptance criteria for UNS S31803 duplex stainless steel and UNS S32750 superduplex stainless steel shall be:

UNS Designation	Hardness, max	
	Base Metal	Weldments and HAZ
S31803	285 HV10	320 HV10
S32750	320 HV10	350 HV10

UNCONTROLLED when printed, visit PTTEP Intranet for latest version

5.3.4 METALLURGICAL PROPERTIES

The extent of metallurgical tests as specified below shall be same as that of Charpy V notch impact test mentioned in Section 5.3.3.2.

For welded components, the samples shall also include the weld (perpendicular to the weld axis) and be prepared so that the weld is at the mid-length of the specimen.

5.3.4.1 *METALLOGRAPHIC EXAMINATION*

Metallographic examination shall be in conformance with ASTM A923 method A on suitably etched specimens at a magnification of 500:1. Metallographic examination shall be performed in both longitudinal and transverse direction.

The metal shall have a homogeneous microstructure free from any laminations, cracks, or detrimental defects. Microstructure at grain boundaries shall be free from carbides, nitrides and inter-metallic phases. The microstructure shall classify as “unaffected structure” as per section 6 of ASTM A923.

5.3.4.2 *FERRITE CONTENT MEASUREMENTS*

The ferrite content shall be determined on the specimens used for the metallographic examination (see above) according to ASTM E562 - 16 points per field, minimum 30 fields and shall be within the range 40-60% for base metal of duplex and superduplex stainless steel and 35-65% for weld metal and heat affected zone of duplex and superduplex stainless steel.

Furthermore, the ferrite content shall be measured using the FISCHER ferritoscope on 10% of the components in final delivery condition. A minimum of five measurements shall be made on each component to be tested.

5.3.4.3 *FERRIC CHLORIDE CORROSION TEST*

Component body and weld (if any) shall be tested. The corrosion test procedure shall be in accordance with ASTM A923 Method C.

For welded components, the test specimen shall be machined perpendicular to the weld axis. The specimen dimensions shall be full wall thickness by 10 mm along the weld and 50 mm across the weld. The test shall expose the external and internal surface and a cross section surface including the weld zone in full wall thickness.

All surfaces, not subjected to the test, shall be electrolytically polished or be surface finished with 600 grit abrasive paper.

UNCONTROLLED when printed, visit PTTEP Intranet for latest version

Test temperature and exposure time shall be as per the following table:

Description	UNS S31803	UNS S32750
Exposure time	24 hours	24 hours
Test temperature for base metal	25 ± 1°C	50 ± 1°C
Test temperature for welded joint	22 ± 1°C	40 ± 1°C

The acceptance criteria for the corrosion rate shall be according to ASTM A923 Method C and there shall be no evidence of pitting under visual examination with a magnification of x 20.

5.3.5 FAILURE OF TESTS – RETESTS

If the results of any of the tests specified do not conform to the specification requirements, the component from which the samples were taken shall be rejected. Retests may be made on additional components (of twice the original number) from the same lot. Sketches shall be established showing type, size and location of re-test samples and submitted to COMPANY for approval before to proceed.

When any retest specimen does not conform to the requirements, the lot represented by this specimen shall be rejected. Retreatment of the components is not allowed.

5.3.6 SPECIFIC REQUIREMENTS FOR WELDED COMPONENTS

Welding Procedure Qualification, Welder Performance Qualification, and testing of welds in welded components shall be as detailed in PEGS-0710-PIP-010.

5.4 FABRICATION

5.4.1 GENERAL

Manufacturer shall not commence manufacturing until the COMPANY has reviewed and approved the Inspection and Test Plan and Manufacturing Procedure Specification. The Manufacturing Procedure Specification shall include all factors that influence the quality and reliability of the piping.

Paint and markers containing zinc or chloride are prohibited.

Correction of deflection by flame straightening is prohibited.

5.4.2 MATERIAL

Pipes shall be made by the seamless or an automatic welding process. The steel plate material shall conform to the requirements of the suitable grade of ASTM A240M.

UNCONTROLLED when printed, visit PTTEP Intranet for latest version

The material for fittings shall consist of forgings, plates, seamless or welded pipes. Furthermore the supplementary requirement S55 of ASTM A960M is applicable: fittings obtained from bar stock or machined from plates are not permitted.

5.4.3 HOT ISOSTATIC PRESSING (HIP)

Hot Isostatic Pressing may be used for forming fittings such as equal or reducing tees etc. subjected to COMPANY prior approval. Manufacturer shall provide details of HIP process during bid stage.

Manufacturing Procedure Specification shall be qualified by non-destructive testing and mechanical tests on the first production piece according to ASTM A988 and this specification.

5.4.4 WELDING

Welding of welded components shall be carried out in accordance with PEGS-0710-PIP-010. Welding shall be followed by a solution annealing heat treatment.

The solution annealing heat treatment and the water quenching shall be taken into account within the WPS and WPQR.

Circumferentially welded joints are not permitted for welded pipes/fittings. Weld bead alignment and inter-penetration shall be in accordance with the tolerances stated in Appendix 1.

All welds, whether made by the fitting Vendor or by the base material Manufacturer, shall be radiographically examined throughout their entire length after forming and after any subsequent heat treatment.

5.4.5 HEAT TREATMENT

All components shall be delivered in solution annealed water quenched condition. Heat treatment shall be performed after all forming, welding and straightening operations but before the final machining operations (if any).

The components shall be carefully arranged inside the furnace in order to avoid any contact between them.

The time between the furnace opening and the quench shall be as short as possible.

The quality of the water used for the quenching must be checked particularly the chloride content; the content of chloride ions Cl^- must remain lower than 25 ppm.

The quench water shall be regularly renewed; circulating flow type is preferable.

5.5 NON DESTRUCTIVE EXAMINATION OF COMPONENTS

Material shall be tested and inspected in accordance with the referenced product specification, the applicable Code and the hereunder requirements.

UNCONTROLLED when printed, visit PTTEP Intranet for latest version

Personnel performing non-destructive testing shall be qualified in accordance with PEGS-12060-INT-001. Qualification certificates of all personnel performing non-destructive examination shall be submitted to COMPANY for prior approval

Non-destructive examination procedures shall be validated and approved by a Level 3 certified inspector.

Non Destructive Testing shall be performed after completion of all mechanical processing, heat treatments, and straightening operations (if any).

Vendor shall submit NDE procedures to COMPANY for review and approval prior to commencing manufacturing.

5.5.1 ULTRASONIC TESTING (UT)

All tubular components shall be fully ultrasonically tested in accordance with ASTM E213. Forged fittings shall be fully ultrasonically tested in accordance with ASTM A388.

5.5.1.1 *ULTRASONIC EXAMINATION OF PIPES*

Reference standards of convenient length shall be prepared from a length of pipe of the same grade, size (NPS, or outside diameter and schedule or wall thickness), surface finish, and heat treatment conditions as the pipe to be examined.

The calibration (reference) standard shall contain both reference Transverse-Tangential and Longitudinal notches electromachined in accordance with figure 3c of ASTM E213 on both the inside and the outside diameters. The depth of the reference notches shall not exceed 5% of the specified nominal wall thickness or 0.1 mm whichever is the greater.

The length of the notch shall not be more than 10 times its depth.

The following requirements shall be met:

- The pipe shall be scanned in both circumferential and axial directions. Removal of external weld reinforcement of welded pipe may be necessary prior to this examination.
- Any indication giving a signal greater than produced by a calibration notch represents a defect; the defective pipe or tubing shall be rejected.

5.5.1.2 *ULTRASONIC EXAMINATION OF FITTINGS/ FORGINGS*

Each fitting/ forging shall be ultrasonically tested to determine its soundness. The method, where applicable, shall be in accordance with Practice ASTM A388M.

- If possible, all sections of fittings shall be scanned in two perpendicular directions. Cylindrical sections shall be scanned radially using a straight-beam technique. When practicable, the fittings shall be examined in the axial direction.

UNCONTROLLED when printed, visit PTTEP Intranet for latest version

- In addition, fittings shall be examined by angle-beam technique from the outside diameter surface.
- A separate calibration block may be used; however it shall have the same nominal composition, heat treatment, and thickness as the fittings it represents.
- Acceptance criteria shall be as per below quality levels as defined in ASTM A745M;
    - Straight beam: any indication response whose maximised amplitude equals or exceeds 100% of the primary reference or distance-amplitude correction curve at the estimated discontinuity depth shall be considered unacceptable.
        - Quality level QL-1: a distance-amplitude curve shall be based upon the amplitude response from No. 8 flat bottom hole (3 mm).
    - Angle beam: any indication of discontinuities equals to or exceeding the notch indication amplitude shall be considered unacceptable.
        - Quality level QA-1: based on a notch depth of 3% of the thickness of the forging at the time of examination.

5.5.2 Liquid Penetrant Examination

Bevelled ends of all finished components shall be liquid penetrant tested (chloride free) in accordance with ASTM E165. Liquid penetrant examination shall cover the bevelled ends and a minimum distance of 30 mm inside and outside the ends.

In addition, all accessible surfaces (external surface and internal) of fittings and forgings shall be liquid penetrant examined on 10% of quantity of each size and heat.

Any cracks, crack-like imperfections or linear indications whatever their sizes are unacceptable.

5.5.3 Eddy – Current Testing of Pipes in lieu of UT

This method may be used as an alternative to ultrasonic testing.

Each length of pipe shall be subjected to an Eddy-current testing in accordance with practice ASTM E309 and ASTM A999M. The entire pipe surface shall be scanned.

Pipes producing a signal equal to or greater than the lowest signal produced by the reference discontinuities (as specified for Ultrasonic examination) shall be identified and separated from the acceptable pipes. Such pipes shall be rejected if the test signals were produced by imperfections that cannot be identified or were produced by cracks or crack-like imperfections.

5.5.4 Non Destructive Examination on Longitudinal Weld

All welds shall be 100% ultrasonic tested and 100% radiographed.

UNCONTROLLED when printed, visit PTTEP Intranet for latest version

5.5.4.1 *ULTRASONIC TESTING (UT)*

The equipment shall be capable of locating longitudinal and transverse flaws at all depth in the weld and heat affected zone.

The probes shall include normal compression wave and 45 degree, 60 degree and 70 degree shear wave angle probes, single and twin crystals 4-5 MHz.

A specific reference sensitivity block shall be used and it shall have the same nominal chemical composition and heat treatment as that of the component it represents. This block shall contain a weld representative of those to be examined.

The reference standards shall consist of cylindrical holes (ϕ1.5 mm ± 0.1 mm) drilled in the heat affected zone through the entire thickness of the block and parallel to the surface of examination (as shown in Appendix 4).

5.5.4.2 *RADIOGRAPHIC TESTING (RT)*

All butt and all full penetration welds shall be 100% inspected by radiographic examination. Radiographic examination shall be done by X-Ray using ISO 11699-1 class C4 (e.g. Kodak T200, Agfa D5) or better film quality.

5.5.4.3 *ACCEPTANCE CRITERIA FOR UT AND RT EXAMINATIONS*

Acceptance criteria shall be according to ASME VIII Div. 1 and with the following additions;

- No crack is permitted
- No lack of fusion is permitted
- No lack of root fusion is permitted
- No lack of penetration is permitted.

5.6 REPAIR BY WELDING

Repair of base metal defect by welding is not permitted.

Repair of longitudinal weld seam defects is permitted as long as it is performed in accordance with PEGS-0710-PIP-010. Weld repairs shall not exceed 20% of the seam length.

The repair shall be duly documented with a complete repair construction file. Pipes that have had weld seam repair shall be identified with the symbol “WR” and shall be so stated and identified on the certificate of tests.

5.7 HYDROSTATIC TESTS

Each length of pipe shall be hydrostatically tested in accordance with the requirements of ASTM A999M. NDE in lieu of hydrostatic test is not acceptable.

UNCONTROLLED when printed, visit PTTEP Intranet for latest version

For welded pipe, the test pressure shall be held for a time sufficient to permit the entire length of the welded seam to be inspected.

The hydrostatic test may not be capable of testing the end portion of the pipe. The length of pipe that cannot be tested shall be determined by the Vendor and reported to the COMPANY for further decision. As a minimum, end portion of the pipe which cannot be hydrostatically tested shall be ultrasonically examined.

Hydrostatic test shall be performed with water in accordance with PEGS-0842-COR-031 and containing less than 2 ppm (2 mg/l) of total iron.

5.8 FINISHING

5.8.1 DIMENSIONS

Dimensions of the pipes and fittings shall be as defined in the COMPANY Specification PEGS-0710-PIP-005.

5.8.2 ENDS

Ends shall be as defined in the PEGS-0710-PIP-005.

5.9 PICKLING AND PASSIVATION

Any surface of component, any ground surface, or weld surfaces and adjacent base metal shall be pickled and passivated after any thermal or mechanical operation, according to a procedure submitted to COMPANY for approval.

In case of oxidation of the inner surface, pickling and passivation shall be carried out on internal surface as well in accordance with PEGS-0710-PIP-013.

Machined surface do not require pickling / passivation.

5.10 MARKING

The marking on any component shall be in accordance with MSS-SP-25.

All marking shall be carried out using low stress die stamping, electronic etching or by vibro-etching method. Vibro-etching shall especially be applicable for material with wall thickness less than 5 mm. Marking shall include following information as minimum;

- Vendor’s name
- Material specification (e.g. ASTM, ISO etc)
- Material grade
- Outside diameter
- Wall thickness / Rating
- Heat number

UNCONTROLLED when printed, visit PTTEP Intranet for latest version

- Batch number
- "WR" symbol for weld seam repair (if any)

5.11 COLOR CODING

Color coding used for the project shall be applied.

In case of no color coding is defined, all components shall be marked with one light green strip for duplex and one red strip for super-duplex on each end.

The paint shall be free of chlorides or of any other substance that might damage the duplex and superduplex stainless steel.

5.12 PACKING AND HANDLING

All components shall be cleaned, dried, packed and handled so as to arrive at their final destination without any distortion or damage in accordance with COMPANY General Specification PEGS-12060-ADM-005. Contact between stainless steel and carbon steel is prohibited.

If the product components have to be stored in the open air before, during or after transportation, they shall be suitably protected against environmental and carbon steel contamination.

5.13 CERTIFICATE

Test certificate shall be of the "3.1" type in accordance with EN 10204 or ISO 10474.

Certificate type 3.2 shall be required for material/ equipment with criticality rating 1 or 2 in accordance with COMPANY General Specification PEGS-12060-ADM-006.

5.14 FINAL DOCUMENTATION

The following documents shall be supplied to the COMPANY as a minimum:

- Certificate of conformance to this specification
- Manufacturing procedure specification
- Quality control procedures
- Materials certificates of all raw material (base metal and consumable): chemical analysis and mechanical properties
- For welded components: WPS, WPQR for main welds and weld repair, welder performance qualification record
- Chemical analysis on product
- Heat treatment records
- Destructive and non-destructive examination tests reports

UNCONTROLLED when printed, visit PTTEP Intranet for latest version

- Reports of the other tests required: Metallographic examination reports, Corrosion test reports, Ferrite content reports, hardness test etc.
- Dimensional inspection certificates
- Hydrostatic tests reports
- Pickling and passivation reports
- Non-conformance reports (if any)
- Weld repair record (if any)
- Item list relating unique serial numbers, lengths, weights and heat numbers.

Final documentation shall be provided in accordance with COMPANY general specification PEGS-12060-ADM-002.

UNCONTROLLED when printed, visit PTTEP Intranet for latest version

6.0 APPENDICES

Appendix 1. Weld Bead Alignment and Inter - Penetration

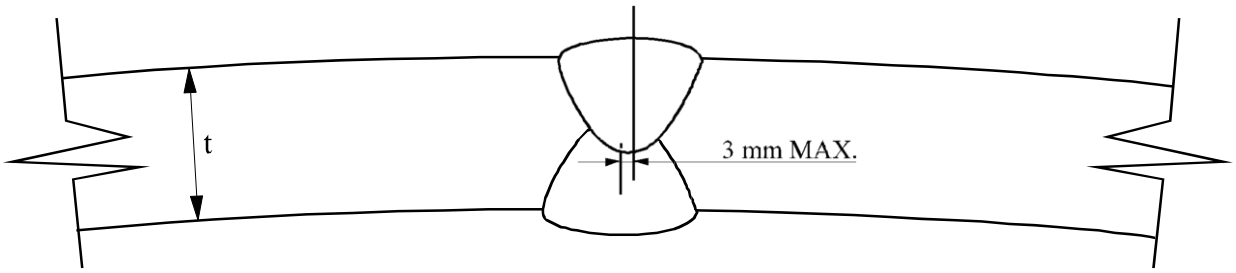

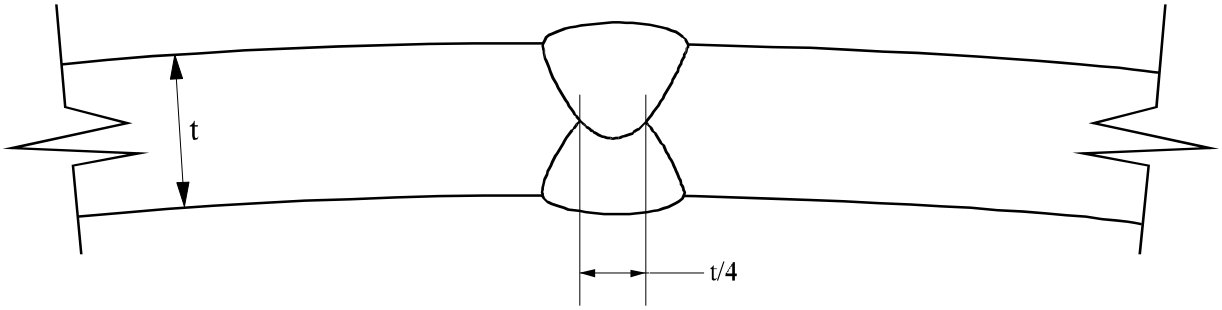

(4 mm MIN.)

UNCONTROLLED when printed, visit PTTEP Intranet for latest version

Appendix 2. Location of Charpy V-Notch Specimens

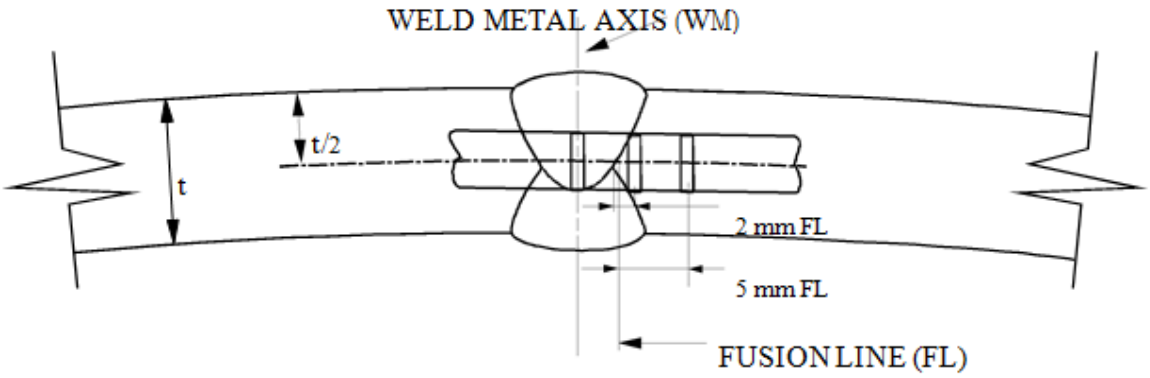

UNCONTROLLED when printed, visit PTTEP Intranet for latest version

Appendix 3. Vickers Hardness and Ferrite Content Survey in Weld

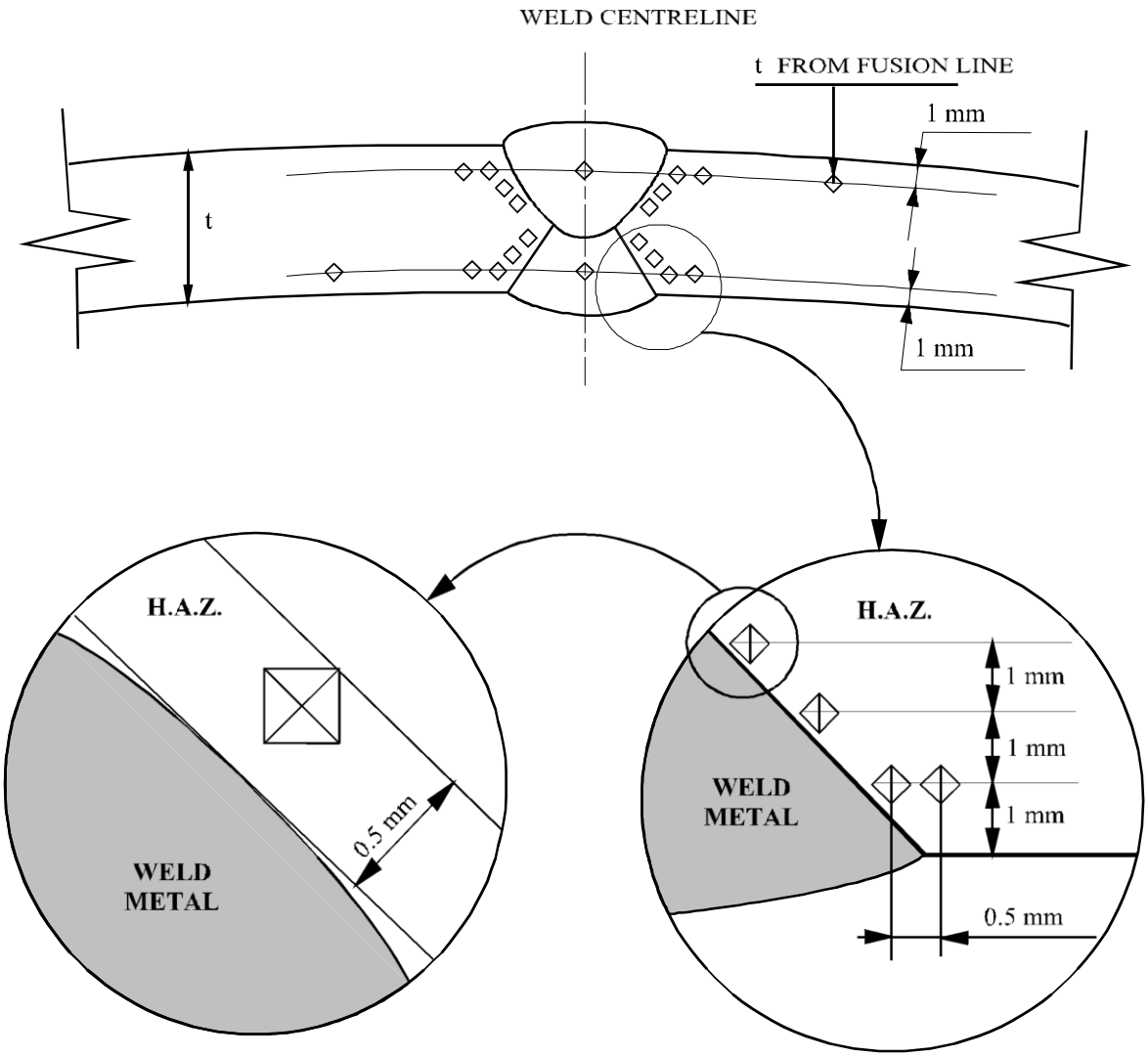

UNCONTROLLED when printed, visit PTTEP Intranet for latest version

Appendix 4. Ultrasonic Testing – Reference Sensitivity Block

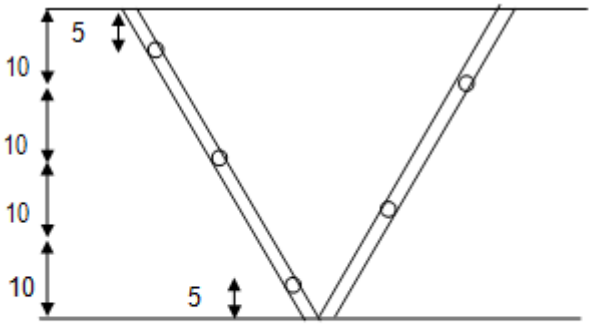

WT = 40 mm

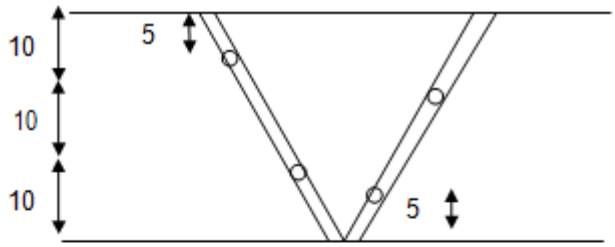

WT = 30 mm

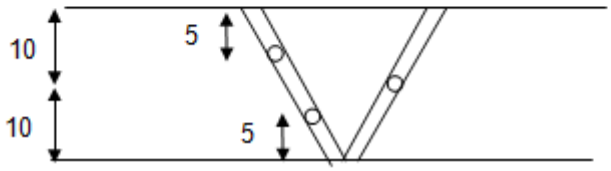

WT = 20 mm

UNCONTROLLED when printed, visit PTTEP Intranet for latest version

EMS User Feedback Form

This section for feedback provider input only

Details of feedback provider	
Name:	
Division/Dept:	
Location:	
Telephone:	
E-mail:	

Area of Concern: ☐ **CMS Content** ☐ **CMS Relevance** ☐ **ISO standard** ☐ **Other standards**

☐ **Others** (please specify)

Document Title: **Document I/D:**

Feedback details *(when referring to documents, please state chapter and page number where appropropriate.)*

(Please add attachments if required)

UNCONTROLLED when printed, visit PTTEP Intranet for latest version

EMS User Feedback Form

This section for EMS Administrator use only	
Date received:	**Feedback register updated:**
Received by:	**Feedback register updated by:**
Form receipt sent:	**Feedback Reference #** **EMS-FB-**

Action taken		
	Date	**By Whom**

Further Action		
Recommended Action	**Deadline**	**By Whom**

Verification of closure of Feedback			
By:	**Title:**	**Dept.:**	**Date:**

Please send this form to EMS-docadmin@pttep.com

UNCONTROLLED when printed, visit PTTEP Intranet for latest version

LAST PAGE – INTENTIONALLY BLANK

UNCONTROLLED when printed, visit PTTEP Intranet for latest version